THE ARTICLES MENTIONED BELOW ARE APPLICABLE ONLY FOR THE UNITED STATES AND CANADA.

1. NOISE EMISSION WARRANTY

SANYANG INDUSTRY CO.,LTD. warrants that this exhaust system, at the time of sale, meets all applicable U.S. EPA Federal noise standards. This warranty extends to the first person who buys this exhaust system for purposes other than resale, and to all subsequent buyers. Warranty claims should be directed to:
3,chung-Hua Road, Hukou, Hsin-Chu Taiwan, R.O.C
Tel:+886 35981911 Fax:+886 35981844

2. TAMPERING WARNING

Tampering with noise control system prohibited. Federal law prohibits the following acts or causing thereof:

(1) The removal or rendering inoperative by any person other than for purposes of maintenance, repair, or replacement, of any device or element of design incorporated into any new vehicle for the purpose of noise control prior to its sale or delivery to the ultimate purchaser or while it is in use, or

(2) The use of the vehicle after such device or element of design has been removed or rendered inoperative by any person.

Among those acts presumed to constitute tampering are the acts listed below.

(1) Removal of, or puncturing the muffler, baffles, header pipes or any other component which conducts exhaust gases.

(2) Removal or puncturing of any part of the intake system.

(3) Lack of proper maintenance.

Replacing any moving part of the vehicle, or parts of the exhaust or intake system, with parts other than those specified by the manufacturer .

3. SAFETY INFORMATION

- Always wear your helmet (dot approved) correctly fastened. Do not carry loose items and always wear suitable protective clothes, and protective eyewear.
- Good psychophysical conditions are very important for safe operation.
- Do not operate under the influence of drugs and/or alcohol.
- Do not operate in state of physical fatigue or drowsiness.
- Slow down on slippery surfaces , unfamiliar terrain and when visibility is reduced.
- Be alert when operating this vehicle.
- Do not exceed weight capacity.
- The safety, stability and handling of this motorcycle may be adversely affected by the addition of accessories or luggage.
- Do not install accessory or replacement parts not approved by sym.
- Failure to follow these warnings could lead to an accident, serious injuries or death.
- Use unleaded fuel octane rating (R+M)/2 method of between 87&92.
- Read owners manual carefully before operating this scooter.
- Obey posted speed limit and other traffic signs and signals.

4. SAFETY DEFECT REPORT

SANYANG INDUSTRY CO., Ltd.
NO. 3,chung-Hua Road
Hukou Shiang
Hsin-Chu County, 303
Taiwan, R.O.C

Reporting Safety Defects

If you believe that your vehicle has a defect which could cause a crash or could cause injury or death, you should immediately inform the National Highway Traffic Safety Administration (NHTSA) in addition to notifying Sanyang Industry Co., Ltd.

If NHTSA receives similar complaints, it may open an investigation, and if it finds that a safety defect exists in a group of vehicles, it may order a recall and remedy campaign.

However, NHTSA cannot become involved in and individual problems between you, your dealer, or Sanyang Industry Co., Ltd.

To contact NHTSA you may either call the Auto Safety Hotline toll-free at 1-800-424-9393(366-0123 in Washington, DC area) or write to:

NHTSA

U.S.DEPARTMENT OF TRANSPORTATION

400 7 th Street SW,(NSA-11)
Washington, DC 205090.

You can also obtain other information about motor vehicle safety from the Hotline.

1. CONTENTS 1
2. USE GENUINE SPARE PARTS..... 3
3. CONTROL LOCATION 4
4. SAFE RIDING PRECAUTIONS..... 14
5. USE OF EACH COMPONENT 19
Gauges 19
Instrument 20
Function indicator 21
Gearshift indicator 22
Ignition switch 23
Steering handle lock 24
Use of buttons 25
Throttle lever 27
Gearshift lever 1 28
Gearshift lever 2 29
Seat removal 30
Fuel tank cap 31
Fuel Valve 32
Brake 33
Parking brake 34
Rear cushion adjustment 35
Accessory socket 36
6. IMPORTANT POINTS AND CAUTIONS FOR STARTING ENGINE 37
Starting & stopping the engine 37
Using the Recoil Starter 38
Parking 38

7. INSPECTION AND MAINTENANCE BEFORE RIDING 39
Brake 1 39
Brake 2 40
Engine oil inspection and change 41
Transmission oil inspection and change 42
Oil filter cleaning 43
Inspection of fuel level 43
Coolant 44
Replenishment of coolant 45
Spark plug replacement & inspection 48
Battery 49
Air cleaner 51
Fuse 52
Tire 53
8. TOOL KIT 54
9. PERIODICAL MAINTENANCE SCHEDULE 55
10.SPECIFICATION 56
11.POSTSCRIPT 57

In order to maintain the ATV best performance, each part's quality, material, and machined precision must conform with the design requirements. **"SYM Genuine Spare Parts"** were made from the same high quality materials used for the original ATV. No parts would be sold to the market until they could meet the designed specifications through sophisticated engineering and stringent quality control. Therefore, it is necessary to purchase **"SYM Genuine Spare Parts"** from **"SYM Authorized Dealers or Franchised Dealers"** when replacing spare parts. If you buy cheap, or fake substitute parts from the market, no guarantee can be provided either for the quality or durability. Also, it may result in unexpected troubles and lower the motorcycle's performance.

Always use **SYM Genuine Spare Parts** to keep your ATV pure blood and to ensure its long service life.

WARING MARK

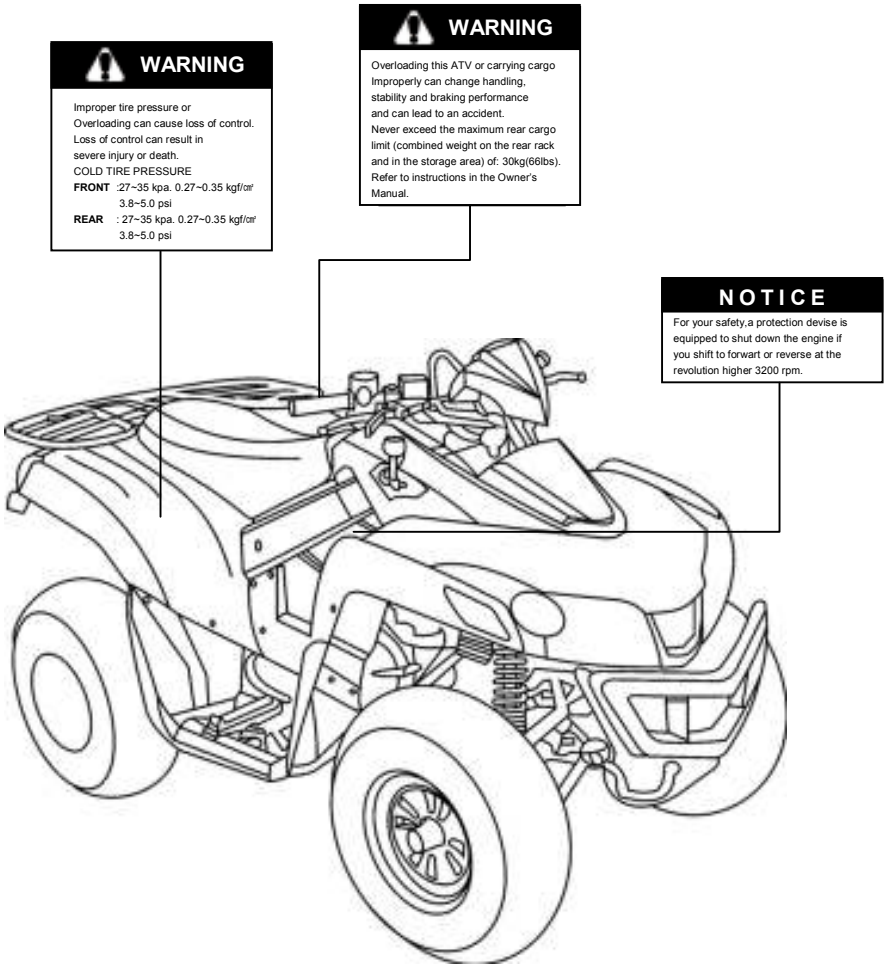
WARNING
Overloading this ATV or carrying cargo Improperly can change handling, stability and braking performance and can lead to an accident.
Never exceed the maximum rear cargo limit (combined weight on the rear rack and in the storage area) of: 30kg(66lbs).
Refer to instructions in the Owner's Manual.
WARNING
Improper tire pressure or Overloading can cause loss of control. Loss of control can result in severe injury or death.
COLD TIRE PRESSURE
FRONT :27~35 kpa. 0.27~0.35 kgf/㎠ 3.8~5.0 psi
REAR : 27~35 kpa. 0.27~0.35 kgf/㎠ 3.8~5.0 psi
NOTICE
For your safety,a protection devise is equipped to shut down the engine if you shift to forwart or reverse at the revolution higher 3200 rpm.

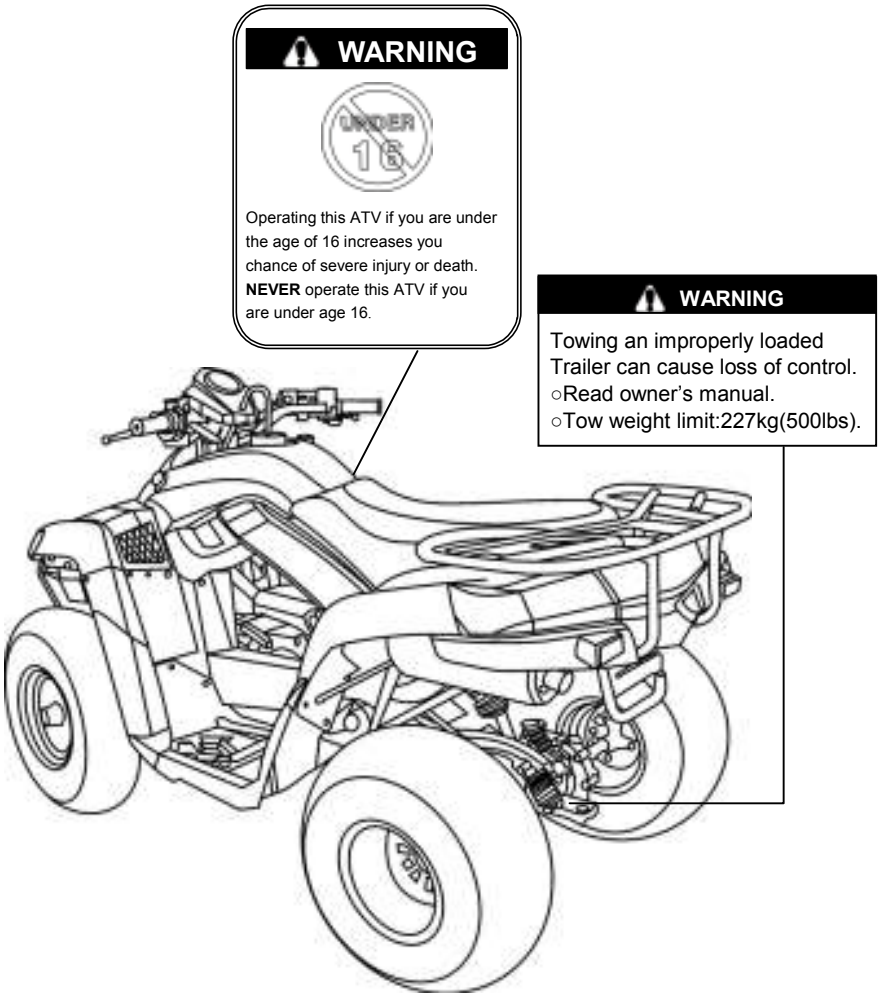
WARNING
UNDER
16
Operating this ATV if you are under the age of 16 increases you chance of severe injury or death. **NEVER** operate this ATV if you are under age 16.
WARNING
Towing an improperly loaded Trailer can cause loss of control.
○Read owner's manual.
○Tow weight limit:227kg(500lbs).

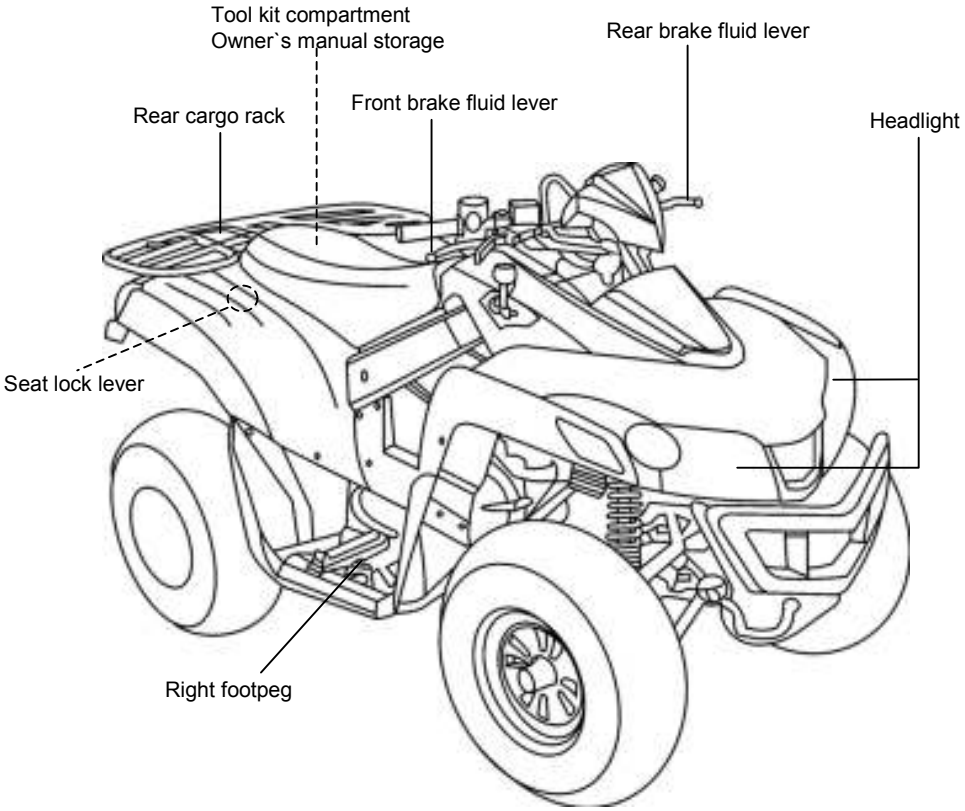
Tool kit compartment
Owner`s manual storage
Rear brake fluid lever
Rear cargo rack
Front brake fluid lever
Headlight
Seat lock lever
Right footpeg

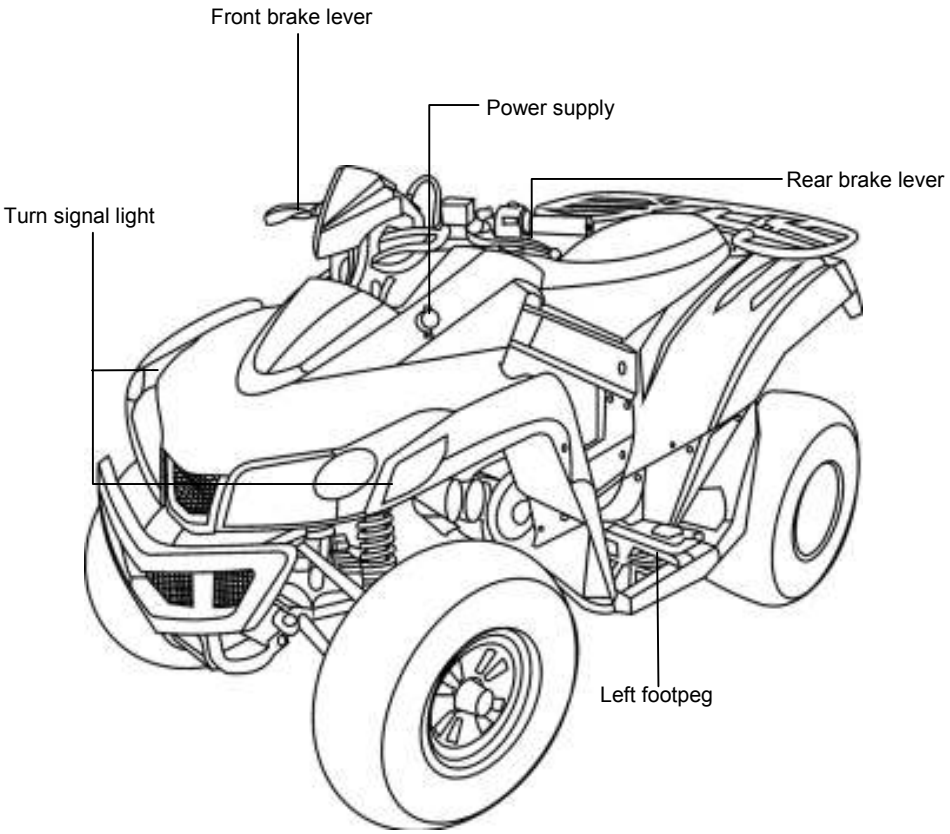
Front brake lever
Power supply
Rear brake lever
Turn signal light
Left footpeg

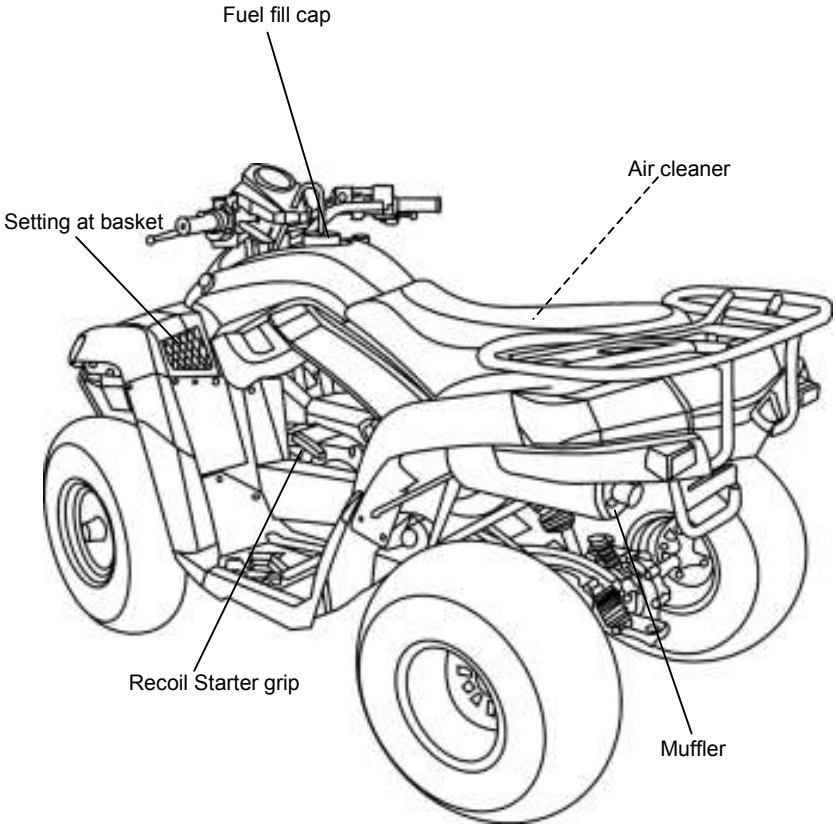
Fuel fill cap
Air cleaner
Setting at basket
Recoil Starter grip
Muffler

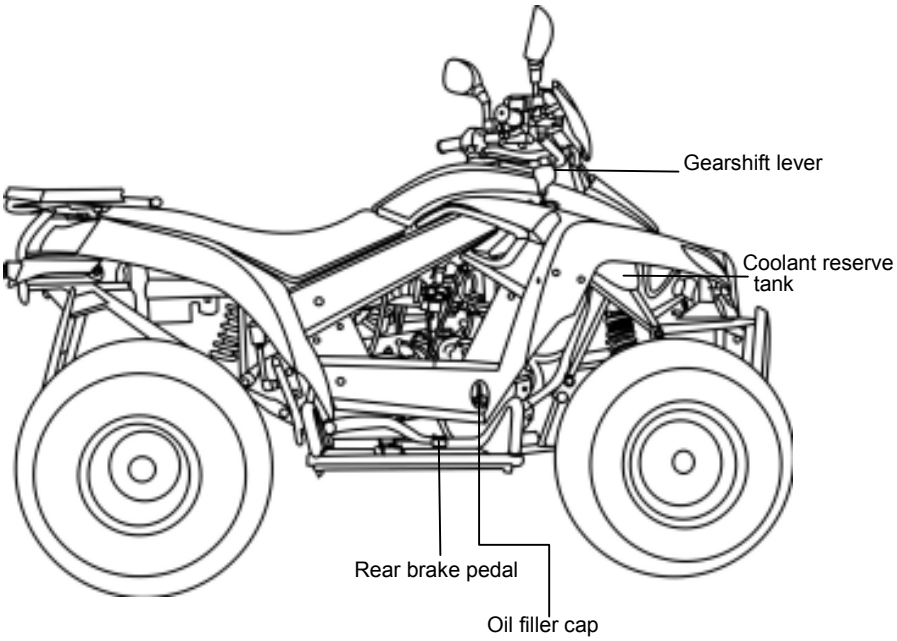
Gearshift lever
Coolant reserve tank
Rear brake pedal
Oil filler cap

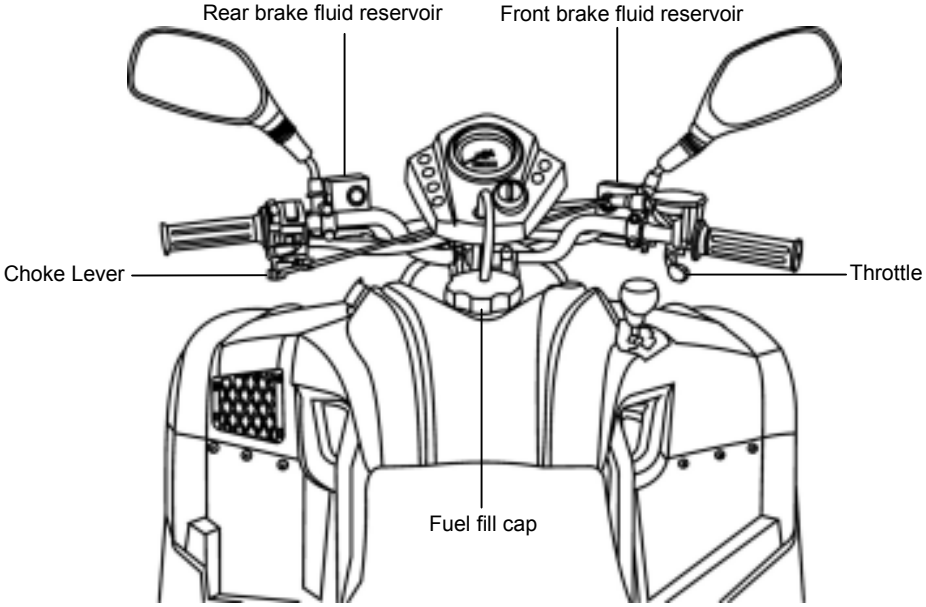
Rear brake fluid reservoir
Front brake fluid reservoir
Choke Lever
Throttle
Fuel fill cap

- Operating this ATV if you are under the age of 16 increases you chance of severe injury or death.

- Do not operate after consuming alcohol or drugs.
- Operator's performance capability is reduced by the influence of alcohol or drugs.

- Know the terrain where you ride. Ride cautiously in unfamiliar areas. Stay alert for holes, rocks, or roots in the terrain, and other hidden hazards which may cause the machine to upset.

- Be familiar the terrain where you ride. You may not have enough time to react on the unfamiliar terrain such as hidden rocks, bumps, or holes. Be sure to go slowly any carefully when operating on unfamiliar terrain.

- If your ATV has stalled or stopped and you believe you can continue up the hill, restart carefully to make sure you do not lift the front wheels which could cause you to lose control. If you are unable to continue up the hill, dismount the ATV on the uphill side. Physically turn the ATV around and then descend the hill.

- Avoid wheelies and jumping. You may lose control of the machine or overturn.

To make a turn on level ground:

- Steer the handlebar and lean your body toward the inside of the turn. Leaning helps balance the vehicle, and it feels more comfortable. Leaning into a turn is an important technique to master in riding an ATV.
- When approaching a curve, slow down and begin to turn the handlebar. Next, put your weight on the footboard to the outside of the turn(opposite the turning direction) and lean your upper body forward into the turn. Use the throttle to maintain an even speed during the turn.

To make a sharp turn at low speed:

- It helps to shift your body slightly forward on the seat, and lean inside, as you steer the handlebar. Shifting weight forward allows the rear wheels to turn easier, and it also improves front-wheel steering.

- Travel when easy slippery road surface, moves the body to front, is helpful to the vehicles advance.

- Although the from and rear brakes have separate controls, your ATV's four-wheel drive interconnects all four wheels. So operating any brake con will cause braking at both the front and rear wheels.
- As a general rule, the front braking system provides about 70 percent of total stopping power.
- For full braking effectiveness, use both the pedal and lever simultaneously. Using braking systems will stop your ATV faster with greater stability.
- Test your brakes after leaving the water. Do not continue to ride your ATV without verifying that you have regained proper braking ability.

Crossing Hills or Slopes

- To maintain balance and stability when riding across a slope, you need to shift weight toward the uphill side of the vehicle. To do this, move your body off the center of the seat and lean toward the uphill side.
- Avoid hills with extremely slippery or loose surfaces. Shift your weight to the uphill side of the ATV.
- Avoid crossing hills that are excessively steep, slippery or rough.

Making Turns on Slopes

- Compared to riding on level ground, you may need to shift more weight ant lean more when making turns on slopes.

- When ATV travel when rugged not good path, the body slightly stands, is helpful to the travel when the bodily stability.
- The ATV may slide during riding on loose or slippery surfaces. To reduce the tendency for the front wheels to slide in loose or slippery conditions, positioning your weight over the front wheels will help.
- If the rear wheels of ATV start to slide sideways, steer in the direction of the slide carefully. Applying the brakes or accelerating is not recommended until you have corrected the slide.

- Crossing a sloping surface requires a properly position on your weight to maintain proper balance. Be sure that you have learned the basic riding skills on flat ground before crossing a sloping surface. Avoid slopes with slippery surfaces or rough terrain that may upset your balance.
- When traveling across a slope, lean your body in the uphill direction. It may be necessary to front wheels slightly uphill. When riding on slopes, do not make sharp turns.
- If ATV does start to tip over, gradually steer in the downhill direction if there are no obstacles. Once recover proper balance, gradually steer again in the direction you to go.

- When climbing hills, you must shift weight toward the front wheels to help keep them on the ground. To do this, shift your body slightly forward on the seat and lean forward. For greater weight shift, move your body father forward and lean forward.

⚠ CAUTION:

- Always check the terrain carefully before you startup any hill.
- Never climb hills with excessively slippery or loose surfaces.
- To climb a hill, take a running start in an appropriate gear and speed for the conditions. Maintain a steady speed as you ascend the hill.
- Never open the throttle suddenly or make sudden gear changes. The ATV could flip over backward.
- Never go over the top of any hill at high speed. An obstacle, a sharp drop, or another vehicle or person could be on the other side of the hill.

- It's usually advisable to descend hills with the ATV pointed straight downhill. Avoid angles that would cause the vehicle to lean sharply to one side.
- On downhills, shift your weight back.
- As you approach a downhill, stop and survey the terrain below. Never ride past the limit of your visibility. Never go down a hill at high speed.
- Use mainly the rear brake to control speed. Avoid using either the front brake or rear brake hard or abruptly when riding down hills.
- Remember, braking effectiveness is reduced on any hill with a loose surface.

Gauges

The following is SYM ATV basic operation. The indicators and displays on your ATV keep you informed, alert you to possible problems, and make your riding safer and more enjoyable.

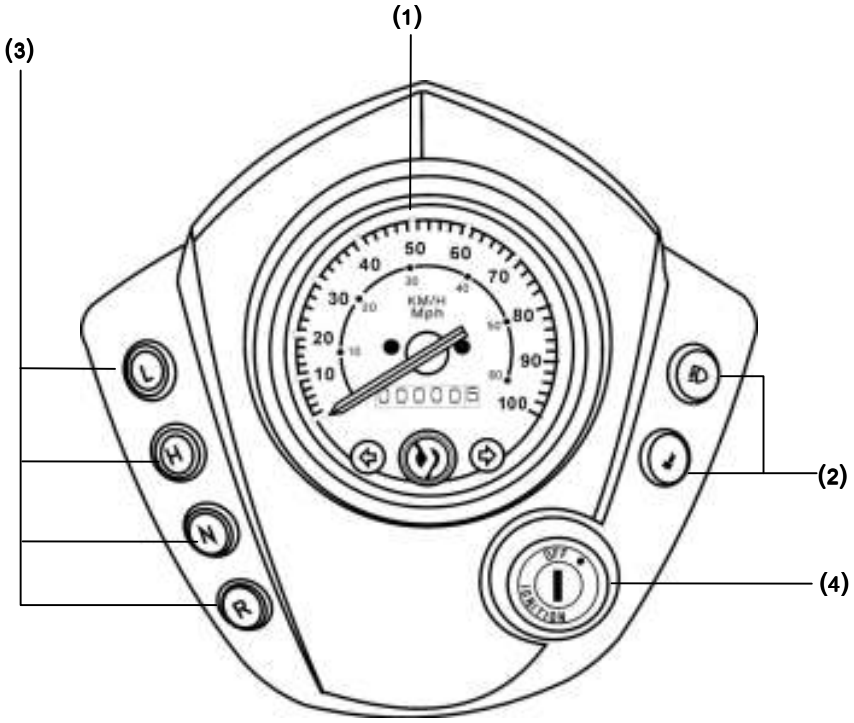

(1) Instrument：

Speedometer、Odometer

(2) Function indicator：

Water temperature indicator、High beam indicator

(3) Gearshift indicator：

Low indicator、Hi indicator、Neutral indicator、Reverse indicator

(4) Ignition switch：

The ignition switch is used for starting and stopping the engine.

Instrument

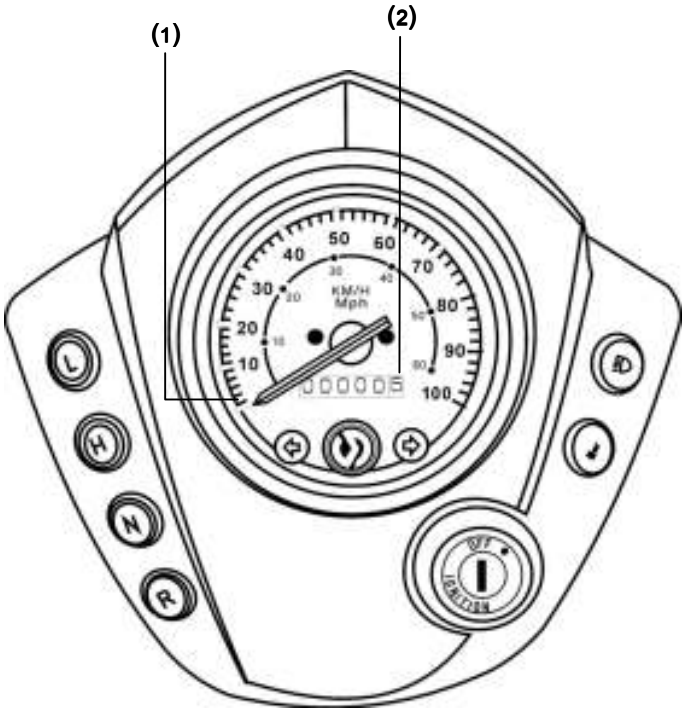

(1) Speedometer:

This shows your speed in kilometers per hour (km/h) and in mileage per hour(mph).

(2) Odometer:

This odometer shows the total kilometers this motor has been driven.

Function indicator

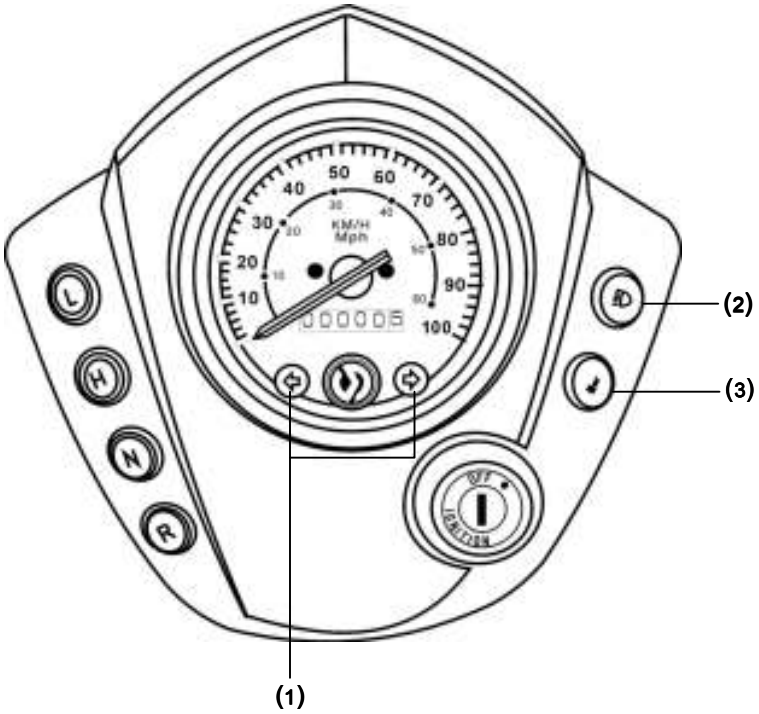

(1) Turn signal Indicator :

The left or right Indicator will be flashing according to the operated directions of turn signal light switch when it is turned on.

(2) High beam indicator :

This indicator comes on when the high beam headlight switch is turned on.

(3) Water temperature indicator :

Lights when coolant temperature is high enough to adversely affect the service life of the engine.
If the coolant high temperature indicator comes on while you are riding, immediately bring the vehicle to a stop, turn the engine off and let it cool.

Gearshift indicator

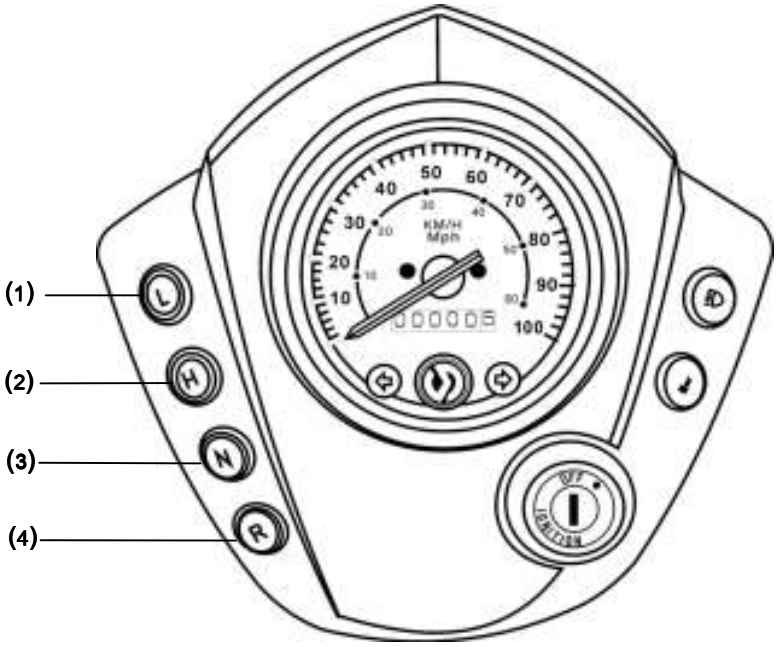

(1) Low indicator：

Use this position to get more power when climbing, dragging extra load, and for better acceleration.

(2) Hi indicator：

Use this position to ride forward.

Use this position for normal riding.

(3) Neutral indicator：

Lights when the transmission is in neutral.

Use neutral when you star the engine, or if it is necessary to stop briefly with the engine idling.

(4) Reverse indicator：

Lights when the transmission is in reverse.

Use this position to ride reverse.

Ignition switch

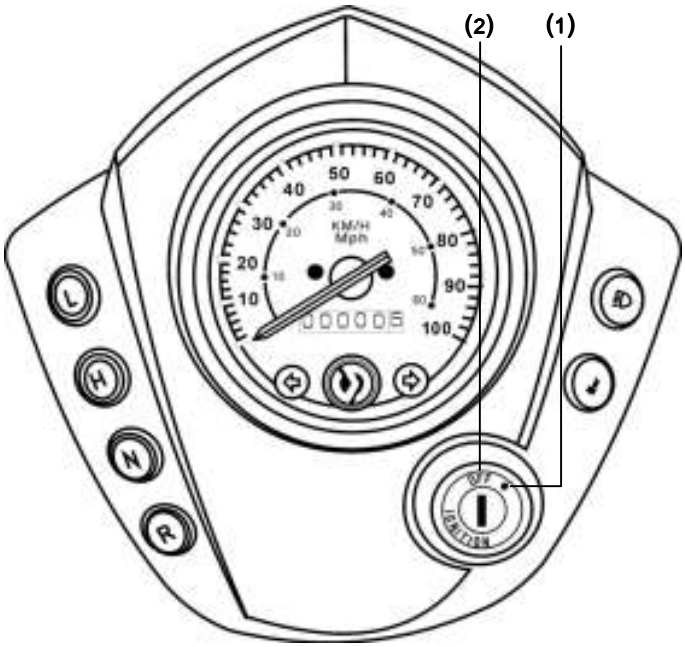

(1) “ ● ” position:

- Engine can be started in this position.
- Ignition switch key can not be removed.

(2) “OFF” position:

- Engine is shut off and can not be started in this position.
- Ignition switch key can be removed.

Steering handle lock

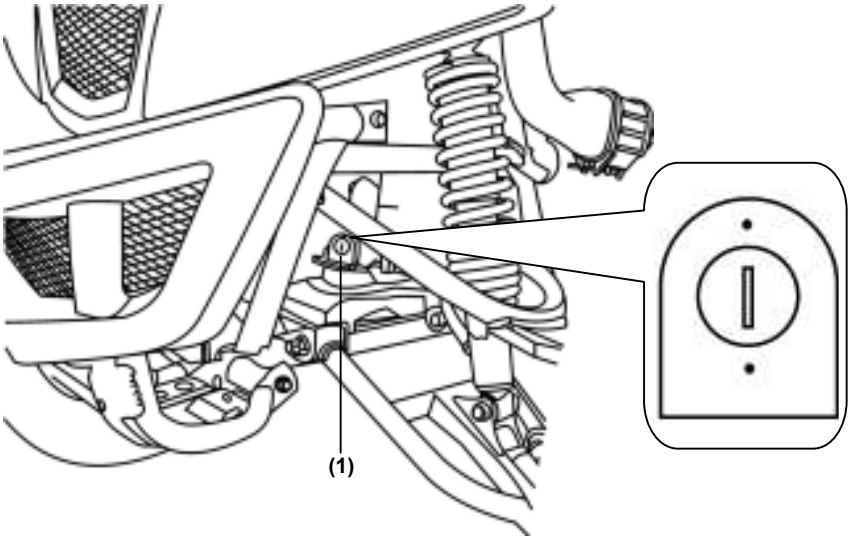

(1) Steering handle lock

The steering handle lock is located on the steering stem directly below the steering head.

- Turn the steering handle fully to the left.
- Insert the ignition switch key into the lock.
- Turn the key clockwise, then the steering handle can be locked.
- Remove the Ignition switch key.
- When unlocking, simply turn the key anti-clockwise.

NOTE:

- For preventing the vehicle to be stolen, lock the handle bar when parked.
- After locked, turn of the handle bar left and right to make sure it.
- When leaving the vehicle, remember to remove the key.

Use of buttons

Left handle - switch 1

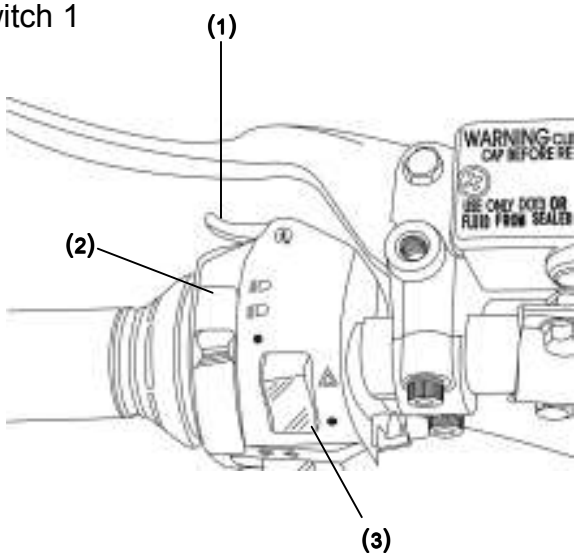

(1) Electrical Starter Button

This is a starting motor button (switch) for engine starting.
With the main switch "ON", press this button while holding the front or rear brake lever will start the engine.

(2) High/Low Beam Switch

This is for high beam.

This is for low beam. (Please turn to low beam when riding in city)

When the switch is turned to this position, all lights will go off.

(3) Hazard Switch

The main switch in the 〝 ON 〞 position, cuts according to this switch, four directions lantern festivals dodge extinguish do move, also can simultaneously dodge on the display board direction indicating lamp extinguishes does moves. If stops the vehicle has when the transportation frequent dangerous position or the vehicle the breakdown, may use the dangerous police to show the switch.

The cut to this position, on four directions lamps and the display board direction indicating lamp namely extinguishes.

Use of buttons

Left handle - switch 2

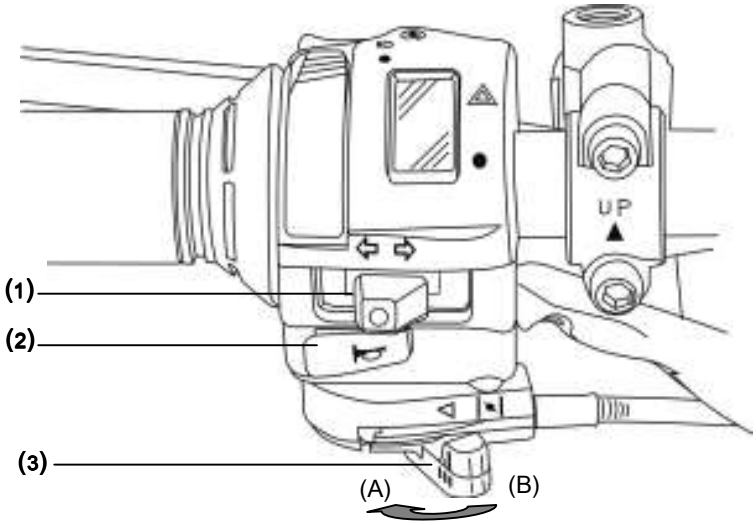

(1) Turn Signal Light Switch

Right-side turn signal light flashing means you intend to make a right turn.

Left-side turn signal light flashing means you intend to make a left turn.

(2) Horn Switch

Press this button down when ignition switch is in the “ON” position to sound, the horn.

(3) Choke lever

- 〝(A)〞 fully OFF , 〝(B)〞 fully ON.
- When the engine starts possibly can use reaches this point choke lever.
- If the engine is will be cold, Choke lever transfers completely dials to ON (A) the position.
- In the festival throttle value closed situation, presses the start button.

Throttle lever

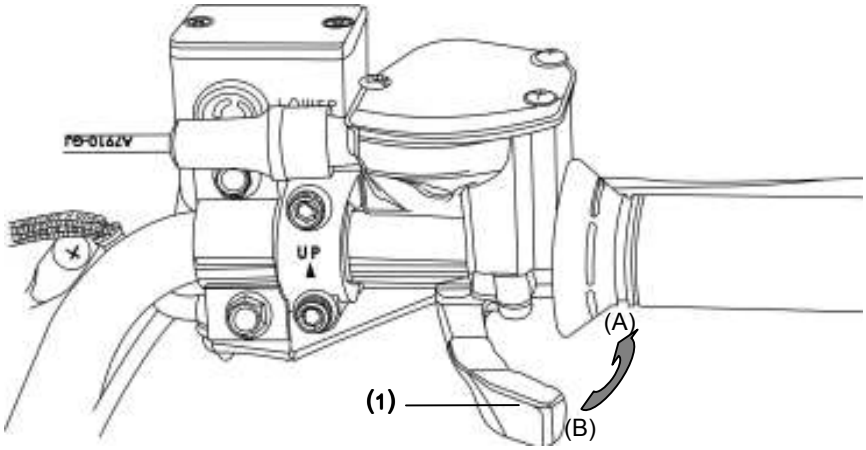

(1) Throttle lever control

(A) Acceleration :

Pulls the pole with the thumb pressure to be possible to advance engine rpm.

(B)Deceleration :

The release pulls on the pole the pressure, then reduces the engine rpm.

Gearshift lever 1

The gearshift lever has three position: LOW (L)、HI (H)、Neutral (N)、Reverse (R).

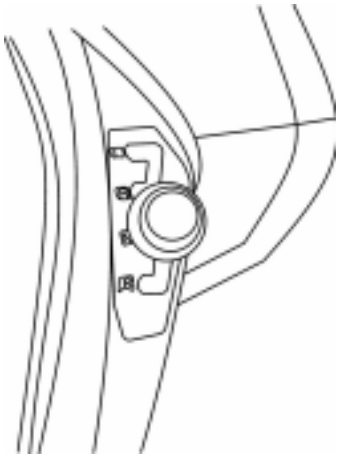

Low (L)

Use this position to get more power when climbing, dragging extra load, and for better acceleration.

Hi (H)

Use this position for normal riding.

Neutral (N)

Use neutral when you start the engine, or if it is necessary to stop briefly with the engine idling.

Reverse (R)

Use this position to ride in reverse.
If you need to ride in reverse, make sure the area behind you is clear and only operate the ATV at low speed.

⚠ CAUTION:

- Improperly operating reverse could cause you to hit an obstacle or person behind you, resulting in serious injury.
- Make sure there are no obstacles or people behind you before selecting reverse gear. When it is safe to proceed, go slowly.

Gearshift lever 2

1.Bring the vehicle to a complete stop, then make sure the transmission is in neutral.
2.Depress and hold down the rear brake level.
3.Be sure there are no obstacles or people in the way.
4.Correctly to catch the rod to disperse into to the R files.

⚠ CAUTION:

- If the gearshift lever is moved while the vehicle is moving, the sub transmission may be damaged.
- If the gearshift lever is moved while the engine revolution is over 3,200rpm, the engine will stop revolving to protect the sub transmission.
- Please always keep the gearshift lever in ‘N’ position when ATV is stop moving.

5.Release the rear brake level.
6.Open the throttle gradually and ride slowly. Do not open the throttle suddenly or make abrupt turns.

Seat removal

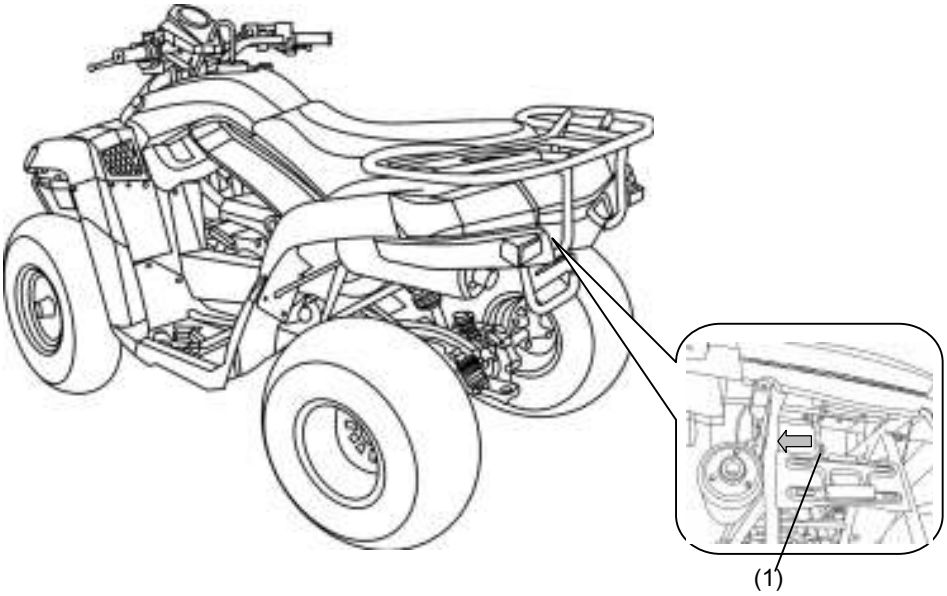

1.Pull the seat lock lever(1) at the Underneath of the seat.
2.The slippery seat back and lifts it.

Fuel tank cap

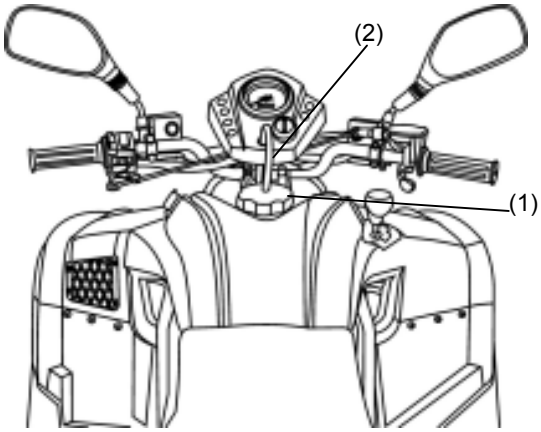

(1) Fuel fill cap

(2) Breather tube

FUEL INSPECTION

- This engine is designed for using the unleaded fuel of Octane 90 or above.
- Firmly secure the main stand on the ground, shut off the engine and keep flames away from the motorcycle when refueling.
- Do not fill above fuel upper limit level when refueling.
- Fuel tank capacity 12liters.

Fuel Valve

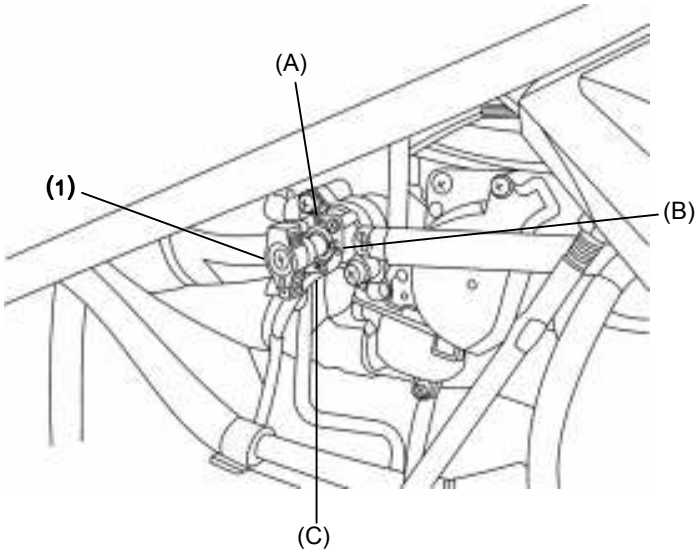

(1) Align the pointer toward the desired position

(A) ON position

(B) OFF position

(C) RES position

ON

Allows fuel to flow to carburetor. This is the normal position for operation of the vehicle.

OFF

Stops fuel supply to carburetor.

CAUTION:

Turn valve to OFF position when ATV is not being operated or when transporting.

RES (RESERVE)

When fuel is exhausted in the fuel tank when in the ON position, an emergency supply of fuel is available by turning the tab to RES. The reserve contains approximately 20% of the fuel tank capacity. Use only this position when the ON supply is empty. When down to the reserve, refuel as soon as possible. Ensure to turn the valve back to the ON position after refueling .

CAUTION:

Improper opening of fuel valve will restrict the flow of fuel.

Make sure valve is fully opened while running.

Brake

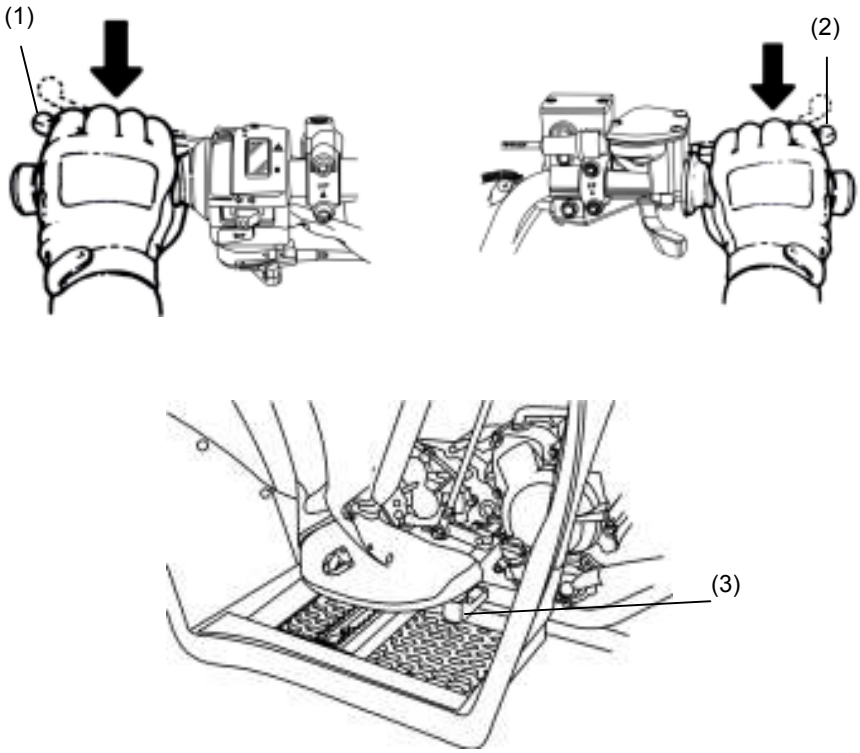

(1) Rear brake lever

The rear brake lever is used to slow or stop your ATV .To operate, pull the lever.

(2) Front brake lever

The front brake lever is used to slow or stop your ATV .To operate, pull the lever.

(3) 4W brake pedal

The rear brake pedal is used to slow or stop your ATV .To operate, depress the pedal.

- Use front and rear wheel brakes simultaneously when braking.
- Avoid unnecessary sudden braking as this may lead to the wheels locking and the ATV going out of control.
- Avoid applying the brakes continuously for a long period of time because that may overheat the brakes and reduce its braking efficiency.
- Slow down and brake early when riding in rainy days on slippery roads. Never apply the brakes suddenly to prevent the wheels locking and sliding.

Parking brake

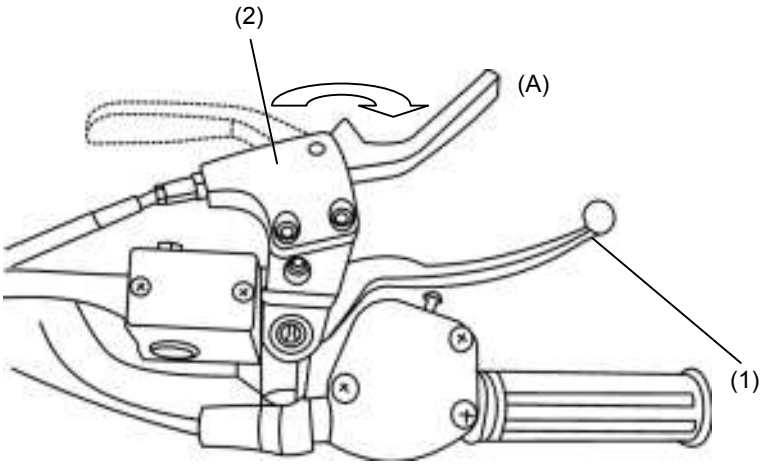

(1) Brake lever

(2) parking lever

(A) To lock

- The lock lever(1)on the front brake lever(2)allows it to be used as a parking brake. To operate, first squeeze the front brake lever and then lock it with the lock lever.
- Before using parking brake, please make sure your ATV is parking on a flat surface.

Rear cushion adjustment

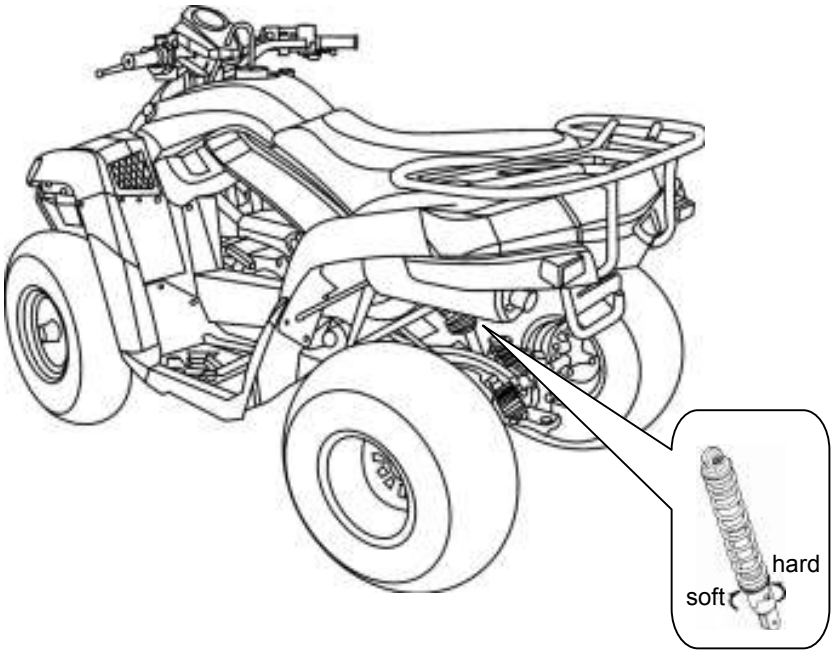

- The front and rear suspension are both adjustable.
- The rear cushion is 5 stage adjustable type. It's set at 3rd stage when manufactured, and you can adjust it depending on your need. Turn counterclockwise to harden it, and turn clockwise to soften it.
- Turn counterclockwise to harden it, and turn clockwise to soften it.
- Mark sure adjust both cushion at the same time to be sure the riding stability.

Accessory socket

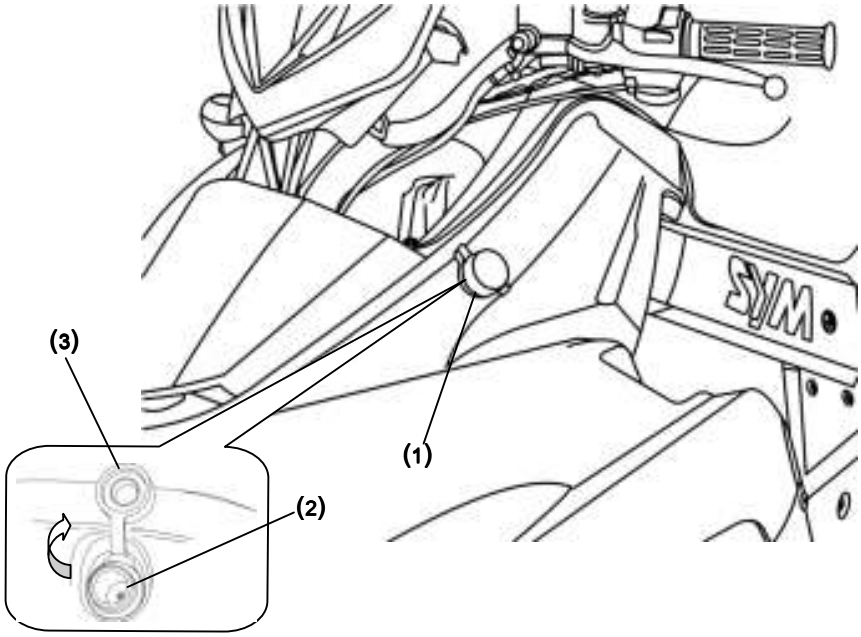

(1) Power supply comp

(2) Accessory socket

(3) Cap

The accessory socket (2) is attached to the left side of the body . You can use the accessory socket to power a trouble light, spotlight, radio, or cell phone, etc.

⚠ CAUTION:

- Do not plug in any head-generating accessory such as an automobile cigarette lighter because it can damage the socket.
- Do not use the socket in raining day.
- Do not splash water or other liquid on socket when using the socket.

To use accessory socket, turn the ignition switch ON to start the engine. Then turn the headlights OFF , and open the accessory socket cap(3).

Starting & stopping the engine

For yours safety, please avoid in the seal area, for example the garage, the start or does moves the engine. In your ATV waste gas includes the virulent carbon monoxide, can fast gather in the seal area and can cause the disease or the death.

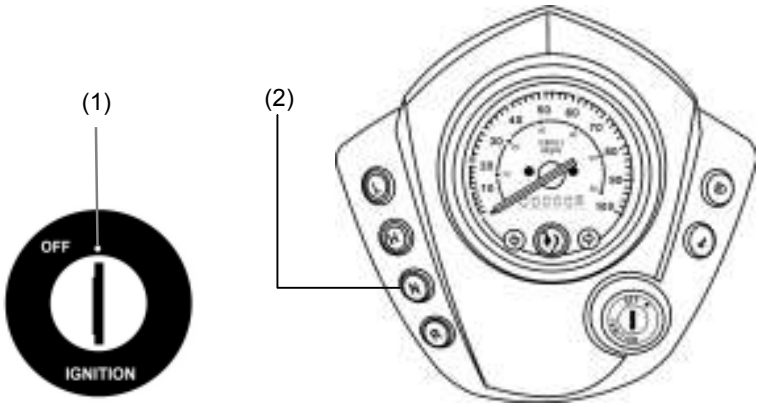

(1) Ignition switch

(2) Neutral indicator

1.Before starting, Select level surface and lock the parking brake .
2.Turn ignition switch key to the “ON” position.
3.The transmission is in NEUTRAL (neutral indicator(2)light on)
4.In the festival throttle value closed situation, presses the start button.
5.Immediately after the engine starts, operate the chock lever to keep fast idle.
6.If idling is unstable, open the throttle slightly.

⚠ CAUTION:

- Under a second rolling the electrically operated start button surpasses 5 seconds, then possibly can cause the starter heat or the damage. Wants in front of the recompression releases this starter button approximately 10 seconds.
- Before start the engine, be sure that install the battery onto the vehicle. Otherwise the electrical components. would be damaged. ◦
- Do not run the engine without the battery fitted on the vehicle.

Using the Recoil Starter

The recoil starter is used to start the engine when the batter is low.

1.Grasp and the starter grip(1) firmly ,then pull it out slowly approximately 4 in (100mm).

2.Pull the grip up briskly and fully.

3.After the engine starts, allow the starter grip to return slowly.

> ⚠ CAUTION:
> • Do not use recoil when battery does not correctly connect to wire or there is no battery on ATV.

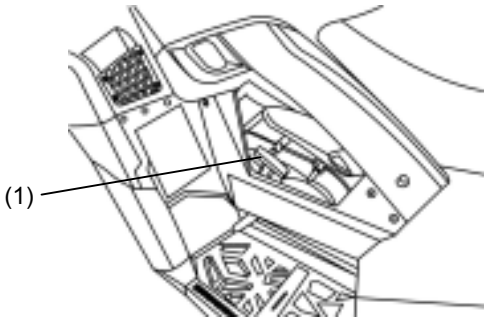

Parking

- Lock for lever parking area. Make sure the ground surface is firm.
- After bringing your ATV to a stop, hold the brakes while you shift into neutral.
- Set the parking brake.
- Turn the ignition switch OFF.
- If it is necessary to start the engine when your ATV is stopped on a grade in gear, rock the vehicle back and froth to allow shifting the transmission into neutral.

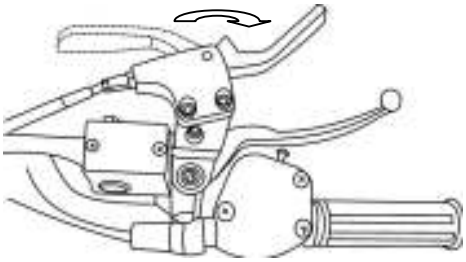

Brake 1

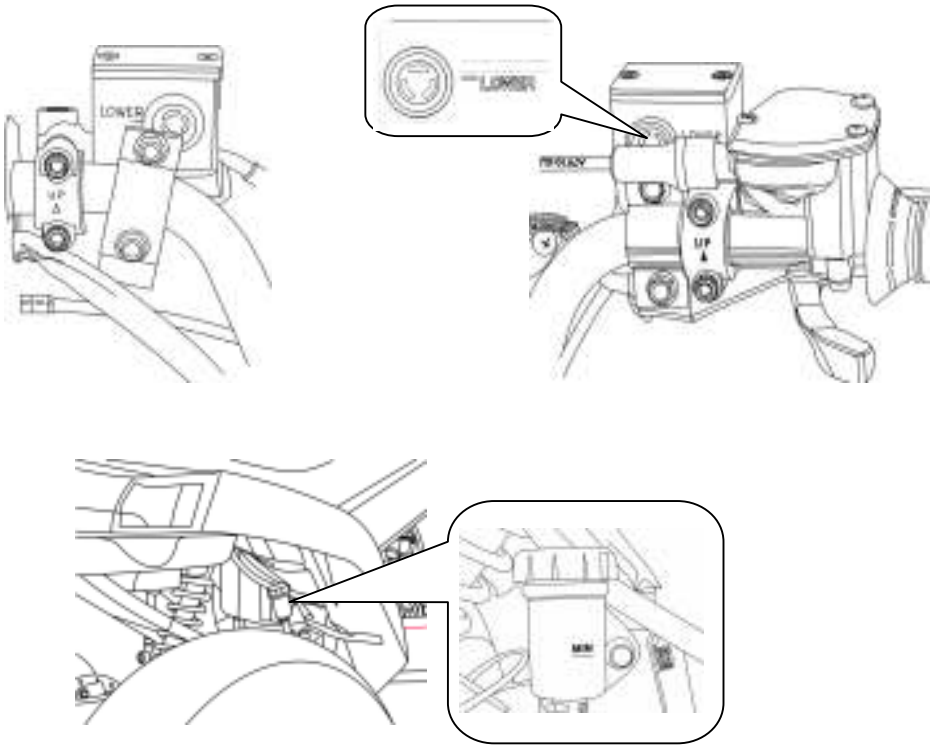

Stops ATV in the level ground, the inspection oil level has in the lower limit?

Brake 2

(Replenishment of brake fluid)

1.Loosen the screws and remove the master cylinder cover.
2.Wipe clean foreign materials , dirt around the reservoir, being careful not to let foreign materials fall into the reservoir.
3.Remove the diaphragm plate and the diaphragm.
4.Add brake fluid to upper level.
5.Install the diaphragm plate and the diaphragm, and install the master cylinder cover. nstall the diaphragm plate and the diaphragm, and install the master cylinder cover.
6.Please note the diaphragm direction, and do not let foreign materials fall into the reservoir. And tighten the master cylinder cover securely.

⚠ CAUTION:

- To prevent chemical reaction, please do not use brake fluids other than those recommended.
- Do not fill above the upper limit when adding brake fluid and avoid dropping on painting or plastic components to prevent damage.

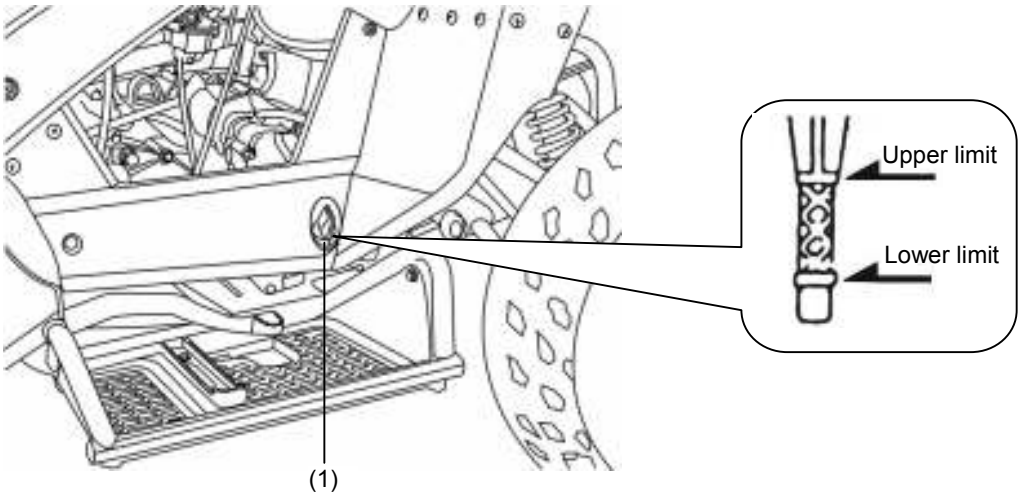

(1) oil filler cap

INSPECTION

1. Uses main parking places standpoint ATV in the level ground, will remove the oil gauge later to stop in the engine the 3~5 minute. Wipes the oil mass oil to count with then inserts it to enter the drive pipe again (Do not rotate it.)

2.Remove the dipstick and check whether oil level is in between the upper and lower marks.

OIL CHANGE:

- Change engine oil after the first 300km or first month, and change the engine oil every 1,000km or 3 months thereafter. Clean oil filter after the first 300km or first month, and clean oil filter every 1,000km or 3 months.
- In order to maintain the engine's maximum performance, check whether the engine oil is enough every month. Add oil to upper limit if the engine oil has been found to be inadequate.
- Engine Oil : Use API SH, SAE 10w-30 grade or better engine oil. Otherwise, damage will not be covered by warranty.

Transmission oil inspection and change

INSPECTION:

- When ATV is stopped in the level ground, stop the engine and wait 3~5 minutes, Wipe the transmission oil screen and check whether the oil level is above lower limit or not.

OIL REPLACEMENT:

- Stop the engine on a level ground. Remove the infusion bolt and drain bolt, drain out the oil.
- Install the drain bolt and tighten it. Fill new transmission oil (1,200 cc.), and install the infusion bolt and tighten it. (make sure that bolts are tightened and check that there's no leakage.)

※ Recommend Oil: Genuine SYM HYPOID GEAR OIL (SAE 90).

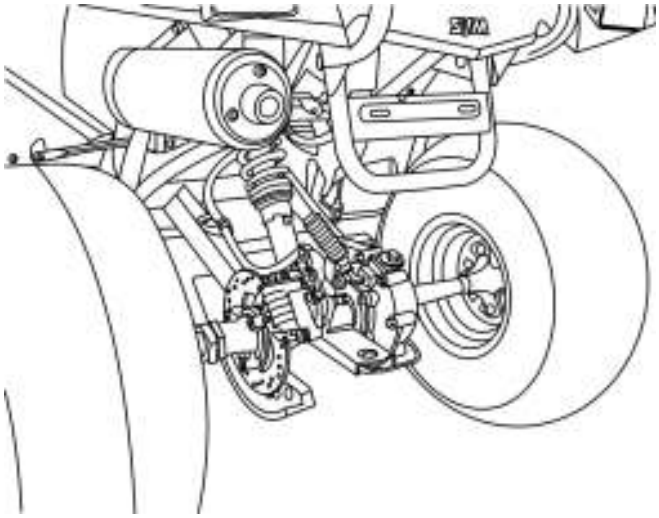

Oil filter cleaning

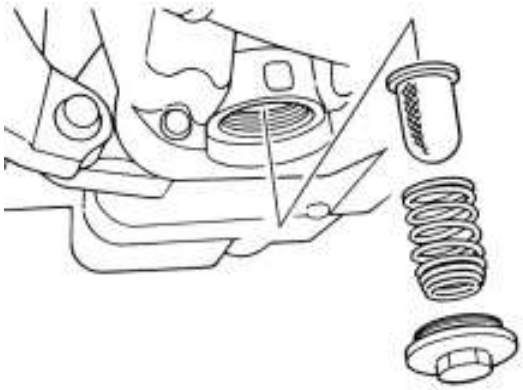

Open the filter nut assembly of the element, and remove the element. Remove the foreign materials from the element by using a gasoline or air spraying gun.

⚠ WARNING:

- Oil level will not be correct when checking the oil level with the motorcycle parked on an unleveled ground or immediately after the engine stopped.
- Engine and exhaust pipe are hot right after engine stopped. Pay special attention not to get burned when checking or replacing engine oil.

Inspection of fuel level

- Uses main parking places standpoint ATV in the level ground,, turn the main switch to “ON” position, check if the fuel meter needle moves.
- Fuel gauge may be defective or electric circuit disconnected if there is some fuel in the tank, but the needle does not move. Please ride slowly to **an authorized service station** to have your ATV checked.

⚠ WARNING:

- Do not check the fuel level or refuel while the engine is running. It is not necessary to start engine to check the fuel level.
- Make sure fuel cap on tank is closed tightly before riding ATV.
- Do not run engine in an enclosed space. Ensure proper ventilation as exhaust fumes may be dangerous and over exposure to same may result in illness, injury or death.
- There is a danger of fire and explosion when handling fuel. Never refuel in an enclosed space.
- Do not over fill the fuel tank.
- Do not spill fuel onto hot engine or related parts.

Coolant

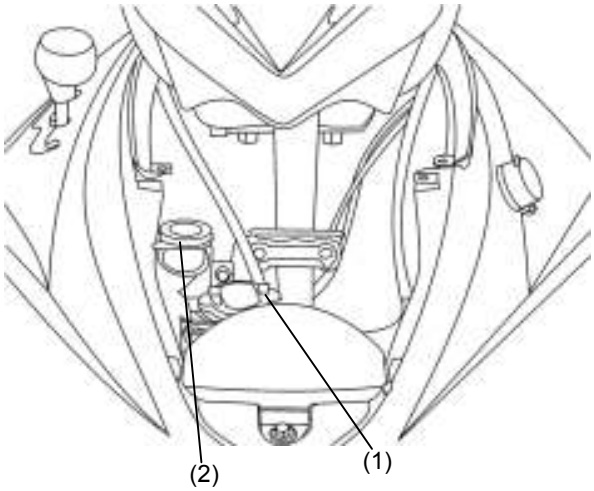

(1) Main radiator

(2) Reserved tank

Maintaining the coolant will allow the cooling system to work properly and prevent freezing, overheating, and corrosion.

COOLING SYSTEM INSPECTION

1. Stops ATV in the level place
2. Check reserved tank from viewing window to see if coolant level is between the upper limit and lower limit mark.
3. Add coolant up to upper mark if coolant is close to the lower mark.

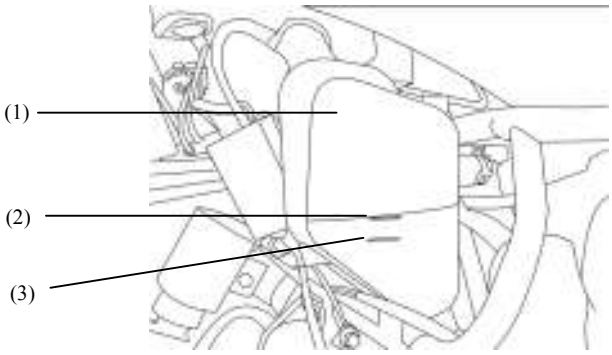

(1) Reserved tank
(2) UPPER level mark
(3) LOWER level mark

(Check the cooling system for leakage)

- Check radiator and piping for leakage.
- Check the ground where the vehicle is parked for water dripped from the vehicle.

Replenishment of coolant

Always keep radiator cap tightly closed.

1. Support vehicle on a level ground.
2. Remove the front cover.
   - Open reserved tank cap, refill coolant until reaches the upper limit.
   - If coolant level becomes too low and occurs too often, it may indicate there is something wrong with the coolant system.
   - To avoid radiator getting rusty, do not use coolants other than those recommended.

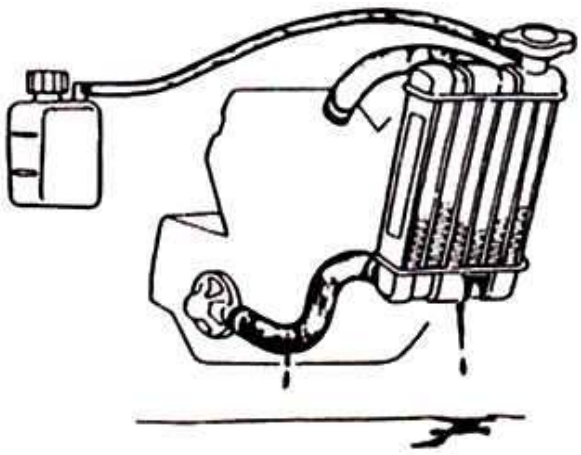

Coolant recommended: SYM Bramax radiator agent
Concentration: 50%
Radiator capacity: Main radiator: 850 c.c.
Reserved tank: 420 c.c.

⚠ CAUTION:

- Use soft water when mixing coolant.
- Please pay special attention that using poor quality coolant may shorten the service life of the radiator.
- Coolant should be changed once a year normally.

⚠ CAUTION:

- Please refer to a table showing what percentage of anti-freeze should be used under different temperatures if the vehicle is to be operated in the low temperature areas. (below 0℃)

A reference table for anti-freeze concentration percentages under different temperatures

1. Radiator anti-freeze specification for this ATV is H68. (SYM Bramax radiator agent)
2. Proper anti-freeze percentages for different frozen temperatures are as follows:

Anti-freeze percentage	Frozen temperature	Remark
20%	-8	50% concentration is used for all ATV before delivery to ensure the effectiveness of anti-freeze.
30%	-15	
40%	-24	
50%	-36	

3. If the specified anti-freeze is unavailable, use an equivalent with the same high quality.
4. Increase radiator maintenance intervals when the weather is extremely cold.

⚠ CAUTION:

- Removing the radiator cap while the engine is hot can cause the coolant to spray out, seriously scalding you.
- Always let the engine and radiator cool down before removing the radiator cap.

Spark plug replacement & inspection

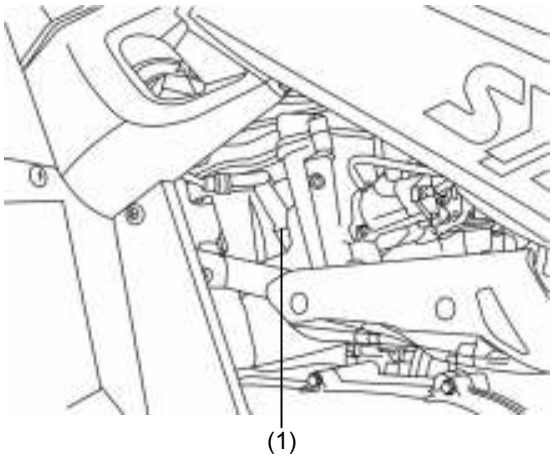

(1) Spark plug cap

CHECKING THE SPARK PLUG

- Remove the cap of spark plug cable (remove the spark plug using the spark plug wrench in the tool kit).
- Check the electrode if it is dirty or fouled by carbon deposits.
- Remove the carbon deposits on the electrode with steel wire, and clean the spark plug with gasoline, then, wipe dry with a rag.
- Check the electrode, and adjust its gap to 0.8 mm. (Check it with a feeler gauge)
- Hand tight the spark plug as far as it can go and then tighten it another 1/2~3/4 turns with a wrench.

⚠ CAUTION:

- The engine is extremely hot after running. Allow ATV to cool completely before removing the spark plug to avoid being burned or other possible injury.

※Use only spark plugs suitable for the engine specifications of this motorcycle recommended by the manufacturer. (Refer to specifications.)

Battery

The storage battery is located underneath the seat.

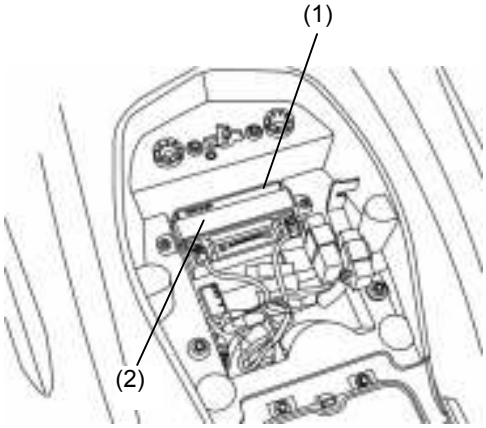

(1) Battery

(2) Battery band

1. make sure the ignition switch is OFF.
2. Remove the seat.
3. Release the rings and remove the rubber band.
4. Disconnect the negative (-) terminal lead from the battery first, then disconnect the positive(+) terminal lead.
5. Remove the battery.
6. Only if you have regularly ride otherwise charges the battery.
7. Store your battery in an easy to obtain location off the floor, in an area protected from freezing temperature and direct sunlight.
8. Slow charge the battery once every 30 day.

INSTALLATION

1. Install in reverse order of removal.
2. Check all bolts and other fasteners are secure.

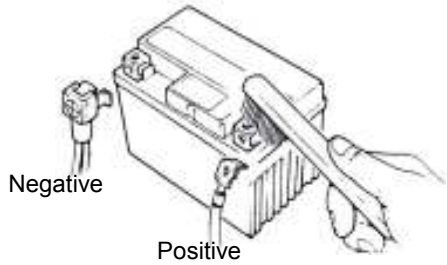

⚠ CAUTION:

- Keep the ATV battery clean. If the battery's posts are corroded and/or are covered with white powder clean them with warm water.
- If there is obvious corrosion on the battery terminals, disconnect the battery cables and remove the corrosion with a steel brush.
- If the battery needs to be replaced, replace with a same closed-type battery (Maintenance-Free).

⚠ CAUTION:

- This ATV uses a sealed type (Maintenance-Free) battery; never remove the battery caps.
- In order to prevent electrical leakage and self-discharge when the battery sits idle for long periods of time, remove the battery from ATV and store it in a well-ventilated and dimly lighted area. Store battery out of reach of children. If the battery is to be kept on the ATV, disconnect the battery's negative cable.
- Replace the battery cables after cleaning and apply a thin coat of grease to the battery terminals when reconnecting the same.

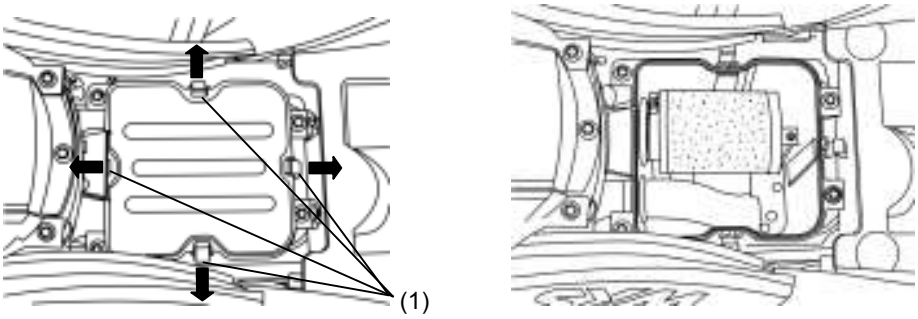

(1) Retainer clips

《DISASSEMBLE PRCEDURE》

1. Remove mounting screws from air cleaner cover.
2. Remove the air cleaner cover, then remove filter element.
3. Take the element out and clean it. (Refer to maintenance schedule.)

《ASSEMBLE PRCEDURE》

Assemble the air cleaner in reverse order of disassemble. Before put the filter element in, please add about 10g SAE30 oil on the element to keep the ability of filtering.

⚠ CAUTION:

- Dust deposit is one of the major causes of reducing output horsepower and increasing fuel consumption.
- Change the air cleaner element more frequently to prolong the engine's service life if the ATV is driven on dusty area very often.
- If air cleaner is installed improperly, dust will be absorbed into cylinders, which may cause a premature wear and reducing output power and engine life.
- Be careful not to soak the air cleaner when washing the ATV. Otherwise, it will cause engine hard to start.

Fuse

Fuse box is on the frame body, remove the seat then you can see the fuse box is on the frame body right side. Turn off ignition switch, and check fuses if they are intact. Replace the blown fuse with a new one having the same specified amperage rating (30A or 15A or 10A). Using a fuse which the amperes is larger than specification, a brass or iron wire to replace a blown fuse is strictly prohibited to avoid damaging the electrical system and the circuit.

- Remove the seat, and you'll find the fuse box near light.
- Open the fuse box cover, and pull out the fuse. Check it for damage or broken.
- Fuses must be firmly secured with wire connectors when replacing. Loose connections will result in overhead and damage.
- Use only parts having the specified specification to replace electrical components such as light bulbs. Using parts not having the specified specifications for replacement may cause the fuse to blow and over-discharge the battery.
- Avoid spraying water directly on or around fuse box when washing the ATV.
- Take your ATV to your dealer for an inspection if a fuse is blown by unknown causes.

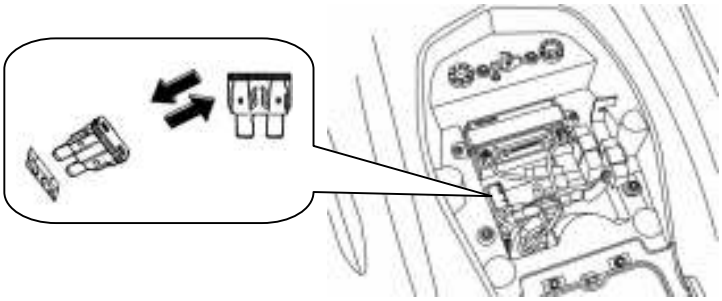

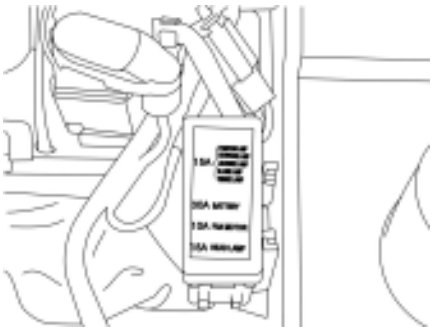

Tire

AIR PRESSURE

The suitable gasification barometric pressure tire provides is holding controls, the tire mileage and rides while comfortableness and so on an aspect best combination. Generally speaking, the barometric pressure is insufficient the tire can wear unevenly, regarding holds controls as well as has many possibly can because the adverse effect which the heat so that damages. The barometric pressure excessively high tire, can cause you rides while ATV when to be able to cause the automobile body even more production to beat, and easily receives the damage and the non-uniform attrition because of the ground interference.

Make sure the valve stem caps are secure. If necessary, install a new cap.

TIRE INSPECTION

- Tires should be checked and inflated with the engine shut off.
- If a tire's ground contacting curve is abnormal, check it with an air pressure gauge and inflate it to the specified pressure to meet applicable standard before riding.
- Tires pressure must be checked when the tire is cool.
- Visual check tires for frontal and lateral side walls for crack or damage.
- Visual check tires for any nails or small stones wedged in the tread.
- Check the "tread wear indicator" condition to see if tread groove depth is insufficient.
- A tire with a wear bar showing is worn out and should be replaced immediately.

TIRE REPLACEMENT

Is designed in your ATV tire matches your ATV the performance, and provides in holds controls, in the ghost vehicle and the comfortable best combination.

Best each time 4 in turn together replace, however if is impossible time, you must pair make the replacement, and the use and the original factory same size and the pattern tire replaces, the single do not replace a tire.

⚠ CAUTION:

- Installs not the suitable tire on ATV, can affect the vehicles to hold controls the nature and the stability. And possibly can cause the collision, causes personnel's casualties.
- The usual use suggests the use in this vehicle owner handbook the tire size and the pattern.

The suggestion use on your ATV vehicle tire is:

COLD TIRE PRESSURE

FRONT: 27~35kpa, 0.27~0.35kgf/cm^2,3.8~5.0psi

REAR: 27~35kpa, 0.27~0.35kgf/cm^2,3.8~5.0psi

Maximum weight capacity: 420 kg(Europe version only)

Maximum weight capacity: 330 kg(USA version only)

This tool bag is the storage underneath the seat in the storage room storage box.
The tools in the kit are sufficient to perform routine maintenance and simple repairs.

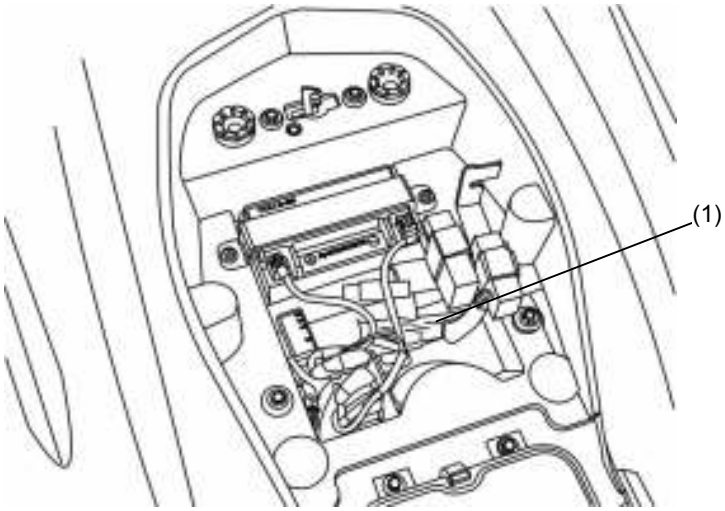

(1) Tool kit

The tool kit includes the following items:
※Standard / phillips screwdriver
- ※ 10╳12mm open end wrench
- ※ 14╳17mm open end wrench
- ※ spark plug wrench
- ※ tool bag

Item	Maintenance kilometer / Check Items / Maintenance Interval	300KM	Every 1,000KM	Every 3,000KM	Every 6,000KM	Every 12,000KM	Remarks
			1 Month	3 Months	6 months	1 Year	
1	Air cleaner element (Remark)	I	C			R	
2	Fuel filter	I			I	R	
3	Oil filter (Screen)	C			C		
4	Engine oil change	R	Replacement for every 1,000KM or 1 months				
5	Tire, pressure	I	I				
6	Battery inspection	I	I				
7	Brake & free ply check	I	I				
8	Steering handle check	I			I		
9	Cushion operation check	I			I		
10	Every screw tightening check	I	I				
11	Gear oil check for leaking	I	I				
12	Spark plug check or change	I		I	R		
13	Gear oil change	R	Replacement for every 5,000KM or 5 months				
14	Rear Gear Box Oil	R	Replacement for every 12,000KM or 12 months				
15	Frame lubrication				L		
16	Exhaust pipe	I	I				
17	Ignition timing	I	I				
18	Emission check in idling	A	I				
19	Throttle operation	I	I				
20	Engine bolt tightening	I		I			
21	CVT driving device (belt)				I	R	
22	CVT driving device (roller)				C		
23	Drive chain	I/L	I/L		C	I/R	
24	Lights/electrical equipment/multimeters	I	I				
25	Fuel lines	I		I			
26	Cam chain	I		I			
27	Valve clearance	I		A			
28	Lines &connections in cooling system	I	I				
29	Coolant reservoir	I	I				
30	Coolant	I	I			R	

☆The above maintenance schedule is established by taking the monthly 1,000 kilometers as a reference which ever comes first.

※Have your ATV checked and adjusted periodically by your SYM Authorized Dealer or Franchised Dealer to maintain the ATV at the optimum condition.

Code: I ~ Inspection, cleaning, and adjustment R ~ Replacement
C ~ Cleaning (replaced if necessary) L ~ Lubrication

Remark: 1.Clean or replace the air cleaner element more often when the ATV is operated on dusty roads or in the Heavily- polluted environment.

2.Maintenance should be performed more often if the ATV is frequently operated in high speed and after the ATV has accumulated a higher mileage.

3.Preventive maintenance

a. Ignition system-Perform maintenance and check when continuous abnormal ignition, misfire, after-burn, overheating occur.

b. Carbon deposit removal-Remove carbon deposits in cylinder head, piston heads, exhaust system when power is obvious lower. Than ever

【Notes in the remarks are used to indicate the applicable models.】

Item \ Model / Specification	UA30A-6
length	1,920 mm
width	1,065 mm
Height	1,110 mm
Wheel base	1,190 mm
Net Weight	235kg
Type	4- stroke 4V electroplated ceramic cylinders engine
Fuel	UNLEADED (OCTANE 92 OR HIGHER)
Cooling type	Water-cooled
Displacement	287.2
Compression ratio	9:1
Max. HP	19.8 ps / 6,500 rpm
Max. torque	2.45 kgf-m / 5,500 rpm
Starting methods	Electrical & Recoil Starter
Front shock absorber	UNIT SWING
Rear shock absorber	UNIT SWING
Clutch	Centrifugal type
Transmission	CVT
Front tire	AT 22X7-10
Rear tire	AT 22X10-9
Tire pressure	Front : 3.8 ±0.2psi / Rear: 3.8 ±0.2psi
Front brake	Disc type (Ø 175 mm)
Rear brake	Disk type (Ø 220mm)
Front light bulb(high, low)	12V H7 55W / 55W X 2
Brake light bulb(tail light)	12V 5W/21W X2
License light bulb	12V 5W
Turn signal light bulb	12V 21W×4
Speedometer light bulb	12V 1.7W
Engine oil capacity	1.4L(1.2L for change)
Final gear oil	1,300cc(1,200cc for change SAE 90)
Gear box gear oil	150cc (SAE 80)
Fuel tank capacity	12L
Fuse	30A X 1 15A X 2 10A X 1
Spark plug	NGK CR8E
Battery capacity	GTX12-BS
Air cleaner	sponge wet type
Rear grab frame	Can not load cargo

⚠ CAUTION:

Riding Through Water:

Your ATV is designed to travel through water up to approximately 25cm(10inches) deep. Before crossing a stream, make sure the water is not too deep or flow too fast.